Sebury®

Metal Access Fashion&Safe

S Touch / S Key

READER

User Manual

1. Introduction, Features and Specifications

1.1 Introduction

sTouch R-w/sTouch R-s/sKey R-w/sKey R-s Reader is a new generation PIN and proximity card reader, allows entry via PIN and/or by presenting a proximity EM, HID, IC or CPU card, with wiegand 26-37, multiple data format output. It is compatible with most access control.

1.2 Features

> Aluminium alloy case, waterproof, fully potted, confirms to IP65. Touch panel (sTouch R-w/ sTouch R-s) or metal keypad (sKey R-w/sKey R-s).
> Built-in 125KHz (EM&HID card) reader: sTouch R-w H&EM/sTouch R-s H&EM/sKey R-w H&EM/s Key R-s H&EM Or 13.56MHz (IC&CPU card, ISO14443A) reader: sTouch R-w M/ sKey R-w M.
> The back light can be set to Normal ON, Normal OFF or Automatic mode.
> Door bell function.

1.3 Specifications

> Operating voltage range: DC12-14V
> Idle input current: ≤35mA
> Max proximity card read range: EM&HID card:3-6cmIC or CPU (Mifare) card: 2-6cm
> Excitation frequency: 125KHz(EM, HID) or 13.56MHz (IC, CPU)
> Card transmit format: Wiegand 26-37
> Keypad output format: Input a 4-6 digits PIN, sends card number, each key press sends a 4 bits data, or each press sends an 8 bits data.
> Dimension (Height×Width×Depth): sTouch R-w/sKey R-w: 125×83×21.7mm;
sTouch R-s/sKey R-s: 158.6×43×21.7mm
> Operating temperature range: -40～60° C (EM&HID card): sTouch R-w H&EM/sTouch R-s H&EM/ sKey R-w H&EM / sKey R-s H&EM. -20～60° C(IC or CPU card): sTouch R-w M/ sKey R-w M.
> Operating humidity: 0-95% (non-condensing)

2. Installation and Wiring Instructions

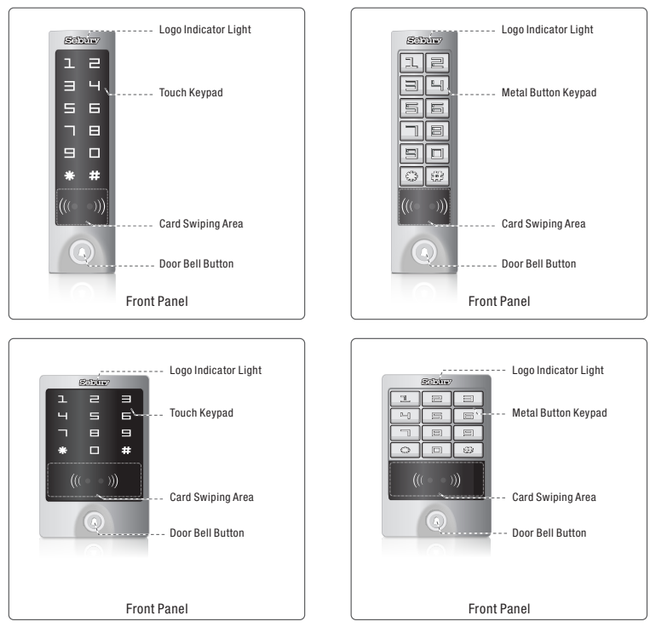

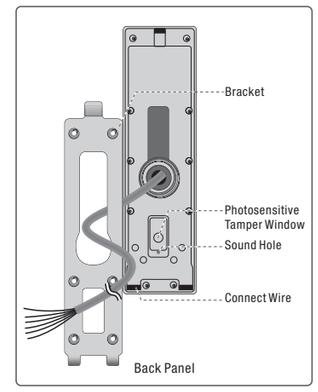

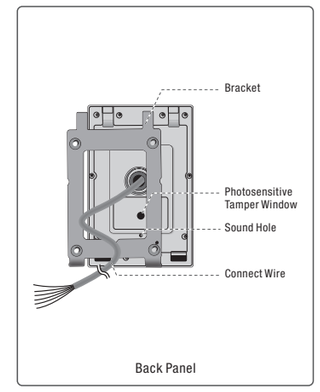

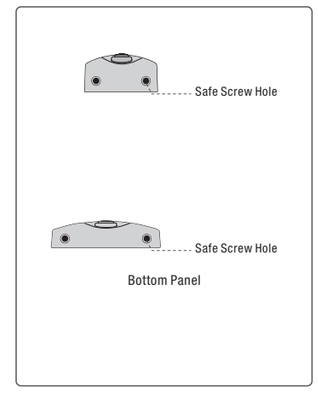

1 Drill Holes

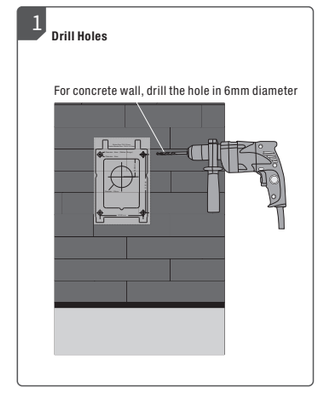

2 Fix the Bracket and Install the Reader

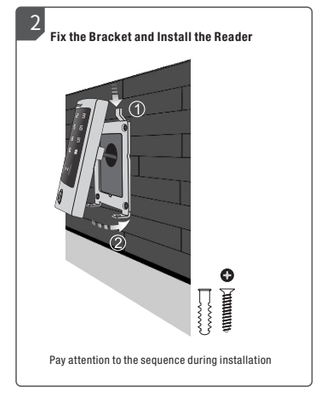

3 Fix Safe Screws

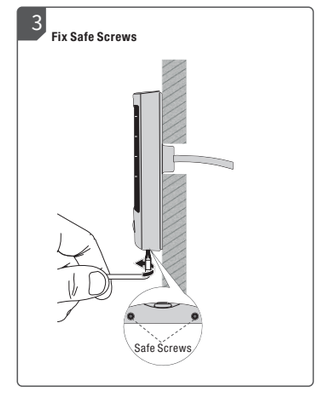

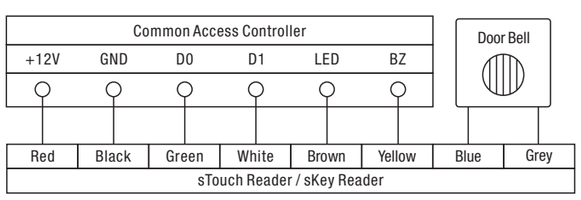

Color	Wiring	Remark
Red	+12V	+12 Power Input
Black	GND	GND
Green	D0	Wiegand output D0
White	D1	Wiegand output D1
Brown	LED	LED input
Yellow	BZ	Buzzer input
Blue	Door Bell	External Door Bell
Grey	Door Bell	External Door Bell

3. Master Keypad Operation

Enter Master Operation Mode. It will return to normal mode if there is no right Master PIN input in 5 seconds. After input of right master PIN, it will also return to normal mode if there is no valid operation in 30 seconds. Press "#" to confirm the input number, return to previous menu by press "*", the LED will indicate the operation mode.

Enter master operation mode			
White	Flash Red	Functions	Remarks
*	6-8 digits Master code #	Enter master operation mode	Factory default : 888888

Reader settings				
Red Flash	Orange Flash	Orange	Functions	Remarks
0		6-8 digits master code, #, Repeat 6-8 digits master code, #	Change master code	
7	0	0-15, #	Set facility code	Default 0
	2	26-37, #	Card number output format	Default 26
	3	0, #	4-6 digits key press sends card number	Default 1
		1, #	Each key press sends a 4 bits data	
		2, #	Each key press sends an 8 bits data	
	4	0, #	Disable alarm ①	Default 1
		1-3, #	Enable alarm 1-3 minutes	
	5	0, #	No door bell function	Default 1
		1, #	No door bell function	
		2, #	Enable external door bell	
		3, #	Enable both build-in and external door bell	
8	1	0, #	Logo indicator light Normal OFF②	Default 1
		1, #	Logo indicator light Normal On	
	2	0, #	Buzzer OFF③	Default 1
		1, #	Buzzer ON	
	3	0, #	Keypad backlit Normal OFF	Default 1
		1, #	Keypad backlit Normal On	
		2, #	Keypad backlit automatic mode ④	
	4	0, #	Disable anti tamper alarm	Default 0
		1, #	Enable anti tamper alarm	

Remarks:

① The anti tamper function will be invalid while alarm function is disabled.
② Normal OFF, except indication in operating.
③ Buzzer will be ON after input of right mater PIN.
④ The keypad backlit will be on after a key press or read card, and it will be off in 30 seconds. While the backlit is OFF, the first keypad press will turn on the backlit, without any other function.

4. Function

4.1 LED

When LED level is low, logo light will turn into Green, after 30 seconds or LED level rising, Logo light will back to normal.

4.2 Buzzer

When BZ level is low, the Buzzer will beep, after 30 seconds or BZ level rising, the Buzzer light will back to normal.

4.3 Alarm

When enable the anti tamper function, if the reader is disassembled illegally, the built-in buzzer will operate.
Input master code can remove the alarm. If there is no operation, the alarm will remove automatically after 1 min.

4.4 Door Bell

Press door bell button, the buzzer will sound ring-back tone, if connect with a Door Bell Decoder, then it can output a switching signal to control the door bell.

4. 5 Wiegand Output Function

When the access host worked as reader, both card number and keypad transmits in Wiegand format, the output data are shown by the Low Level of D0 & D1 cable:
D0: Low level means 0, green cable
D1: Low Level means 1, white cable

The wire in green (D0) is the wire for Wiegand 0, and the wire in white is the wire for wiegand 1. The pulse width for low voltage is 40uS; and the time interval is 2mS.

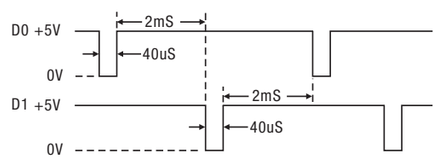

The digit of card number can be set to 26- 37 bit and it should be matched with the controller, Factory default is 26 bit.

When you set it to 26 bit, the HID card will output wiegand 26-37 automatically as the format of the card, other card will output wiegand 26. when you set it to wiegand 27-37, all of the card will output wiegand 27-37 compulsively.

There are 3 formats output of card press (format 1 is factory default)
Format 0: 4-6 digits key press sends card number format: Input 4-6 digits PIN, press "#", output a wiegand 26-37, 10-bit decimal card number. For example, input password 999999, the output card number is 0000999999, could be displayed by 10-bit decimal card number display equipment.

Format 1: Each key press sends 4 bits data, the corresponding relationship is:
1 (0001) , 2 (0010) , 3 (0011)
4 (0100) , 5 (0101) , 6 (0110)
7 (0111) , 8 (1000) , 9 (1001)
* (1010) , 0 (0000) , # (1011)

Format 2: Each key press sends 8bit output data, the first 4 digits is ones-complement code for th e last 4 digits, the corresponding relationship is:
1 (11100001) , 2 (11010010) , 3 (11000011)
4 (10110100) , 5 (10100101) , 6 (10010110)
7 (10000111) , 8 (01111000) , 9 (01101001)
* (01011010) , 0 (11110000) , # (01001011)

5. To Reset to Factory Default

Keypad access control(sKey-w, sKey-s), power off, keep pressing * and power on, the logo will turn in orange after 1 second, release it until hearing two shot beep, then hearing a long beep, reset to factory default setting is successfully.

Touch panel access control(sTouch-w, sTouch-s), power off, power on, the logo will turn in orange after 1 second, press * within 1 second, release it until hearing two shot beep, reset to factory default setting is successfully.

Remark: Reset to factory default, the users' information is still retained.

6. Sound and Light Indication

Operation Status	Logo Color	Buzzer
Standby	White	
Press Key		Short Ring
Read Card	Green	Long Ring
Unlock the lock	Green	Long Ring
Operation Successful	Green	Long Ring
Operation Failed		3 Short Ring
PIN Inputting	Slow Flash Red	
Card & PIN Reading	Slow Flash Red	
Multi Card Reading	Slow Flash Red	
1st menu	Slow Flash Red	
2nd menu	Slow Flash Orange	
Under Setting	Orange	
Manager Card Reading	Orange	2 Short Ring
Manager Card Exit	White	Long Ring
Alarm	Quick Shine in Red	Alarm
Ring-back Tone		Ding-Dong

7. Packing List

Name	Qty	Remark
Packing Box	1	
Card Reader	1	Model (Read card type) as labels on the products
User Manual	1	
Rubber Bungs	4	Φ6mm×24 mm (White)
Self Tapping Screws	4	ΦKA3mm×25 mm (Stainless steel)
Screw Driver	1	